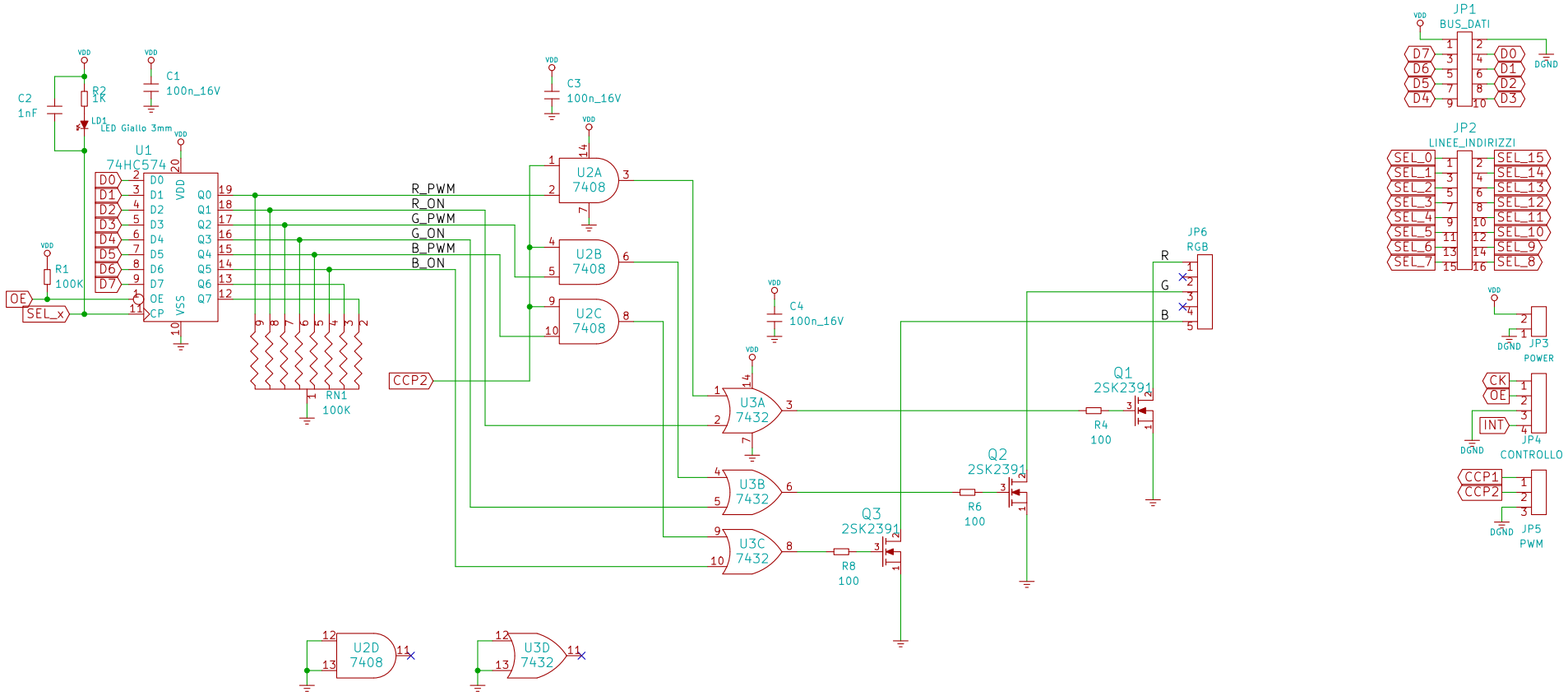

Walter Lain		
File: rgb_pwm.sch		
Sheet: /		
Title: 877 – Modulo PWM RGB		
Size: A4	**Date: 4 jul 2010**	**Rev: 0.8**
KiCad E.D.A.		Id: 1/1